ZMSDR v2.1 by YU3MA

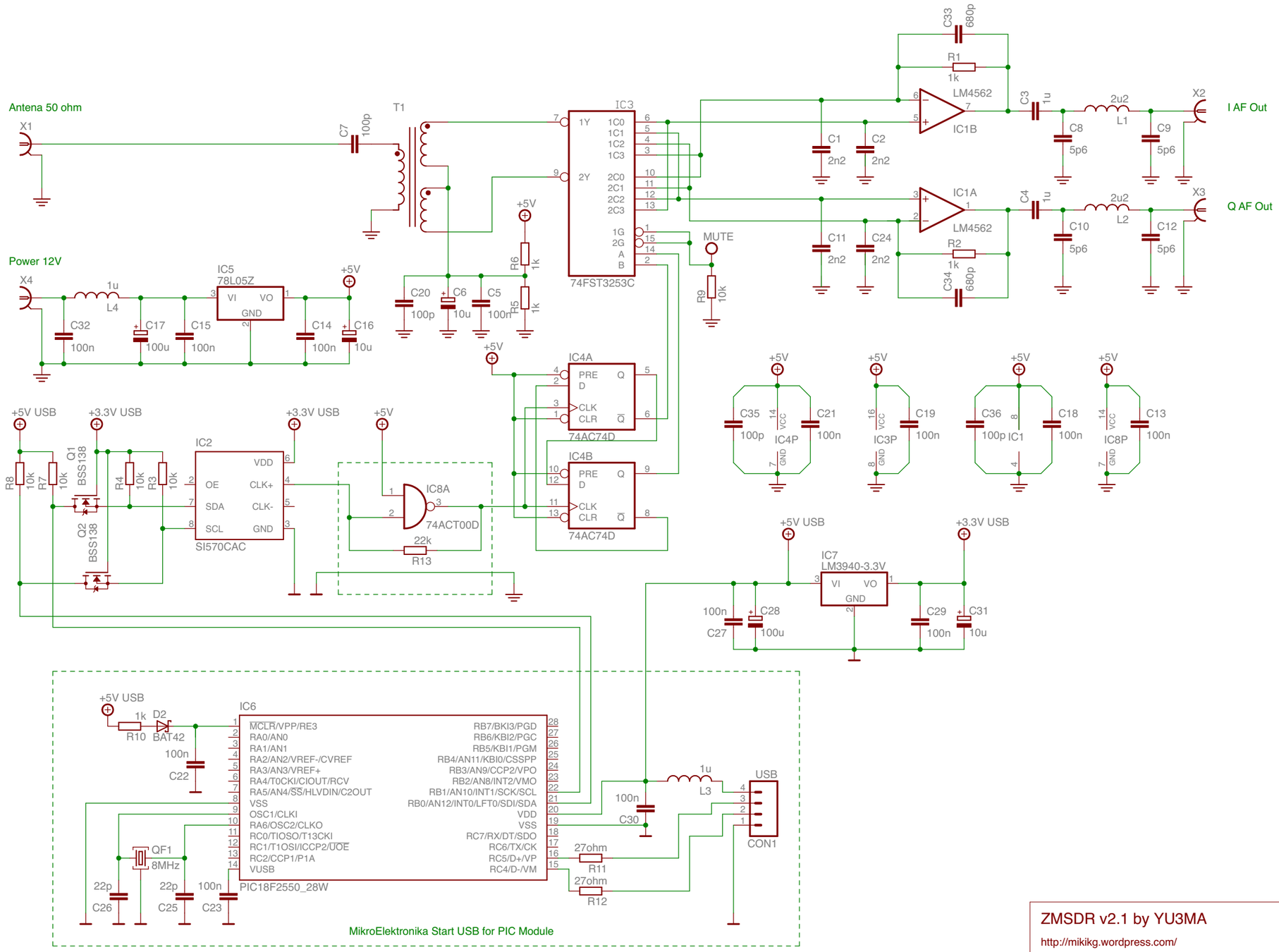

ZMSDR v2.1 by YU3MA

http://mikikg.wordpress.com/

TITLE: zmsdr_v2

Document Number:

REV: 3

Date: 12/11/11 9:59 PM

Sheet: 1/1